EXPERIMENT 6

BJT BIASING CIRCUTS

6.1 Objectives

In this experiment, different BJT biasing circuits will be examined, current and voltage values of the DC operating point of these circuits will be determined.

6.2 Equipment List

1. DC Power Supply, Digital Multimeter
2. Transistor (BC547)
3. Resistors (1 kΩ, 2.2 kΩ, 10 kΩ, 100 kΩ)

6.3 Preliminary Work

1. Study different structures of BJT biasing circuits such as “Fixed Bias”, “Fixed Bias with Emitter Resistor”, “Voltage Divider Bias”, “Feed-back Bias”, “Common Collector Bias (Emitter Follower)” and “Common Base Bias”.
2. Calculate I_B, I_C, I_E and V_{CE} values for each circuits in Figure 1,2,3,4 and 5. (Assume forward active region and $\beta = 100$)

6.4 Experimental Procedure

1) Construct the circuit given in Fig. 1. Measure and record the I_B, I_C, I_E and V_{CE} values.

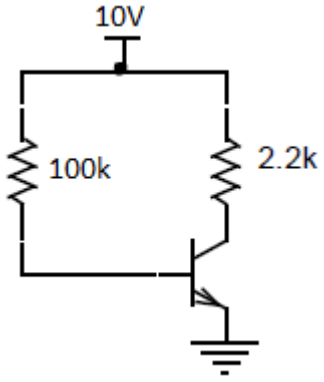

Figure 1. Fixed Bias Circuit

2) Construct the circuit given in Fig. 2. Measure and record the I_B, I_C, I_E and V_{CE} values.

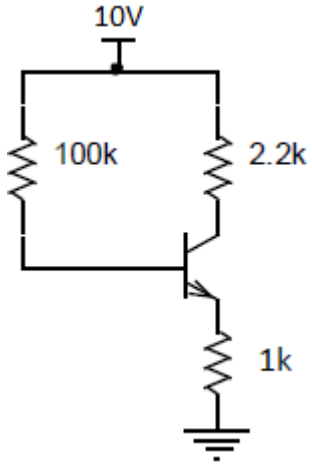

Figure 2. Fixed Bias with Emitter Resistor Circuit

3) Construct the circuit given in Fig. 3. Measure and record the I_B, I_C, I_E and V_{CE} values.

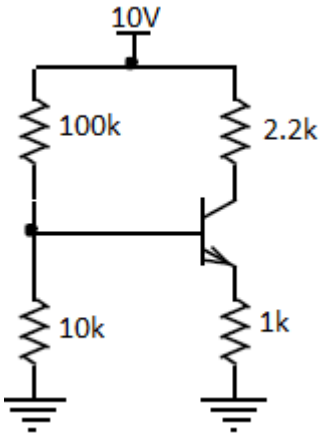

Figure 3. Voltage Divider Bias Circuit

4) Construct the circuit given in Fig. 4. Measure and record the I_B, I_C, I_E and V_{CE} values.

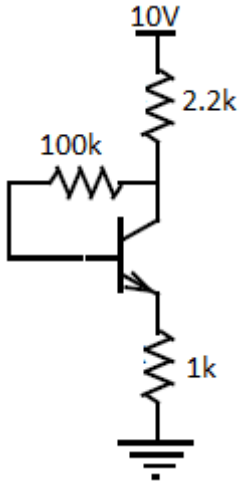

Figure 4. Feedback Bias Circuit

5) Construct the circuit given in Fig. 5. Measure and record the I_B, I_E and V_{CE} values.

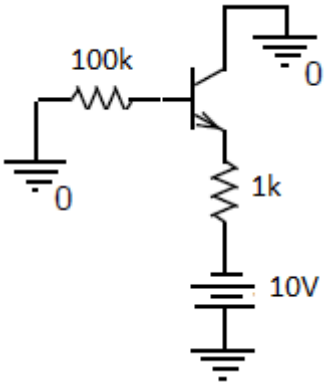

Figure 5. Common Collector Bias (Emitter Follower) Circuit

6) Compare the theoretical and experimental results in tables.

7) For the circuits given in Figure 1, 2 and 3, which biasing circuit is better? Why? What is your evaluation criteria?

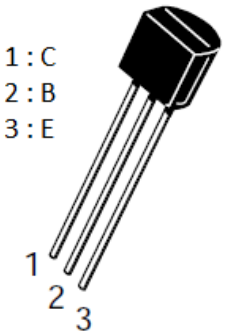

Figure 6. Pin diagram for BC547